Installation Manual

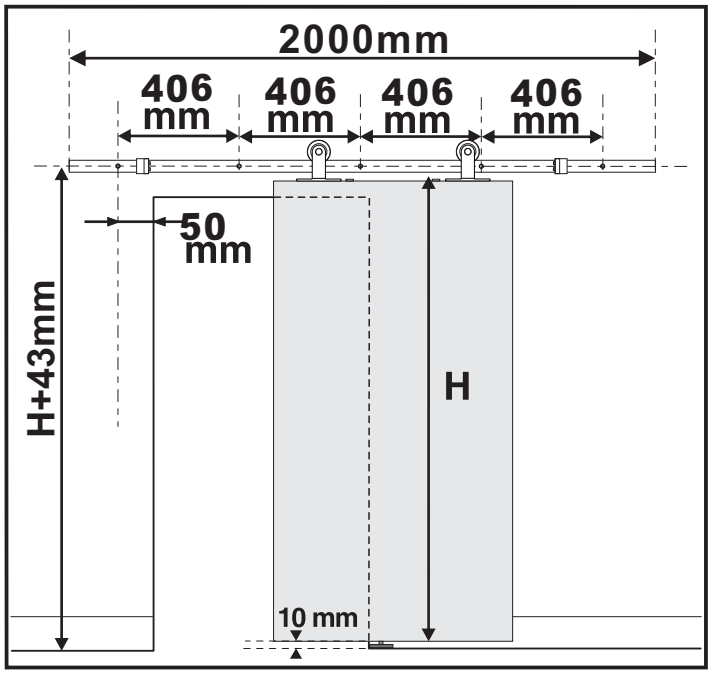

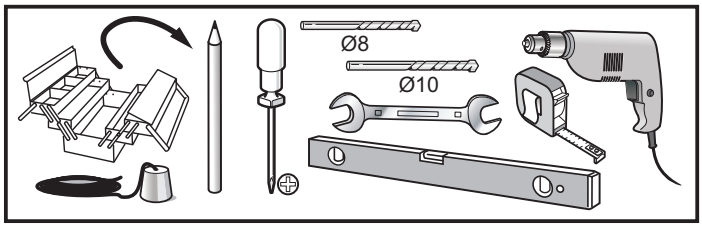

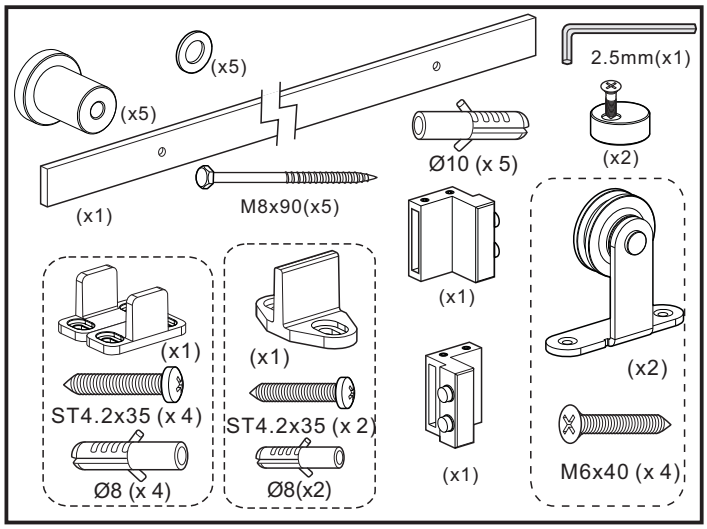

1

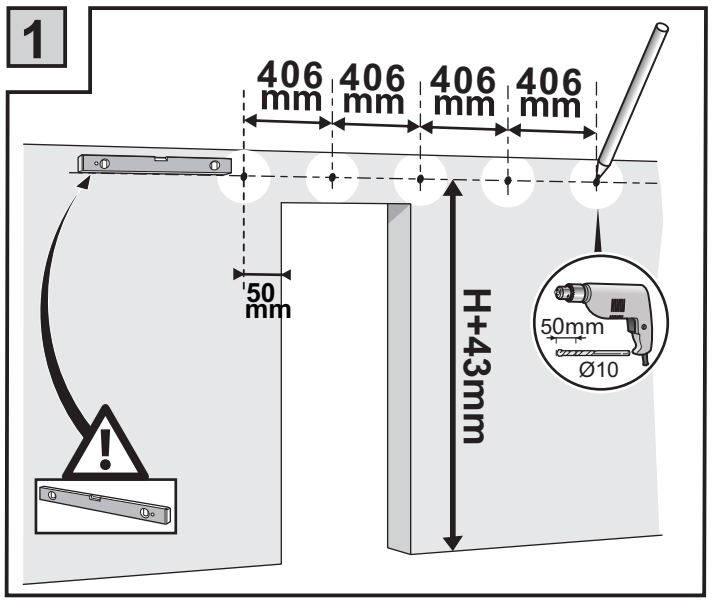

3

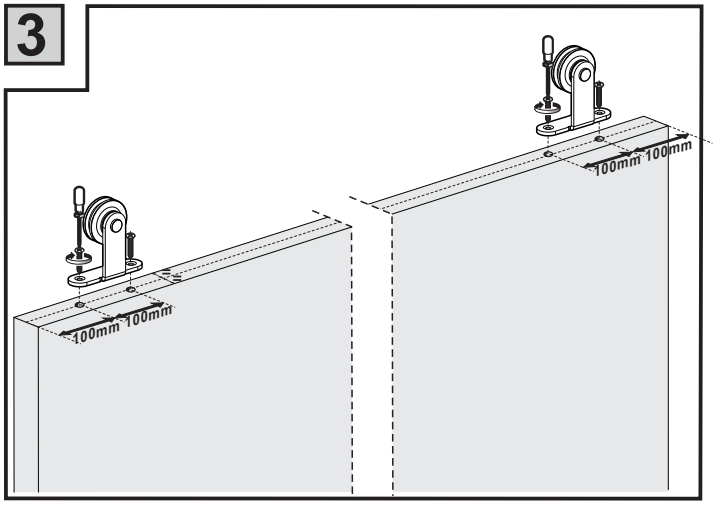

2

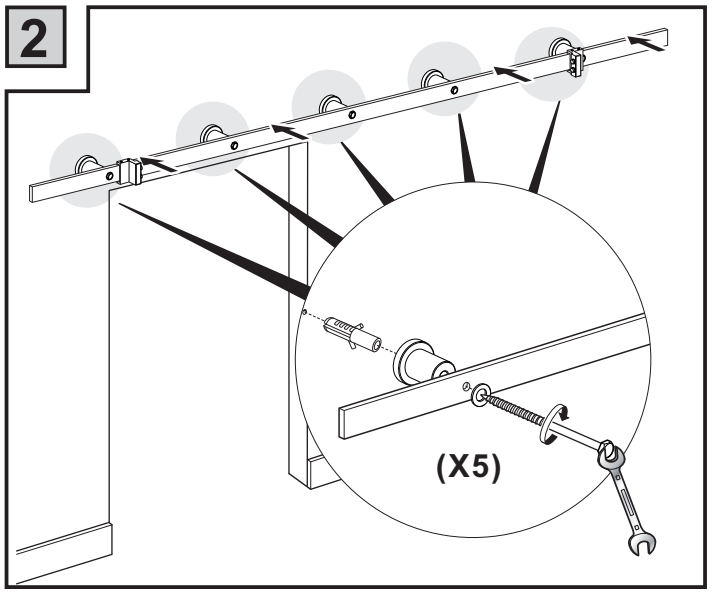

4

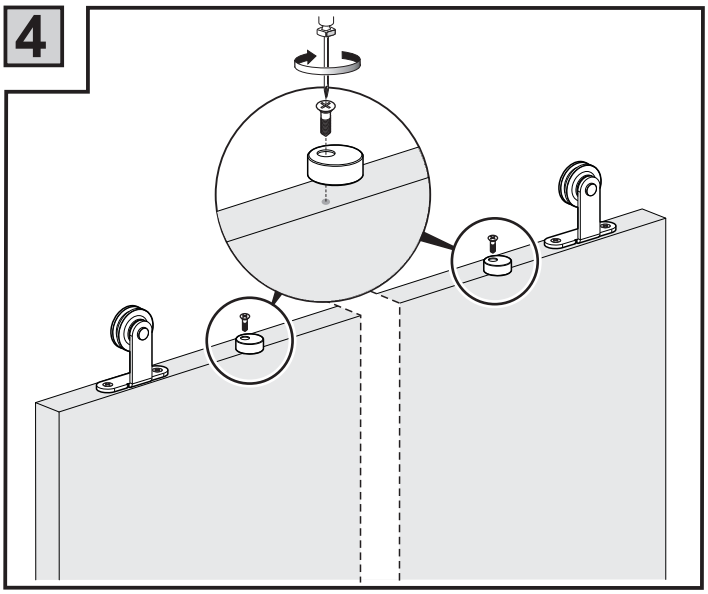

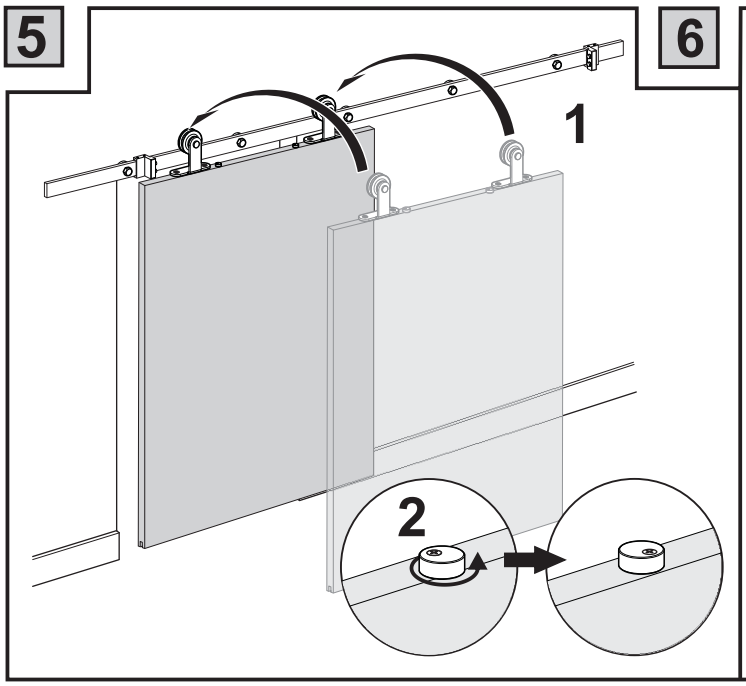
5
1
2

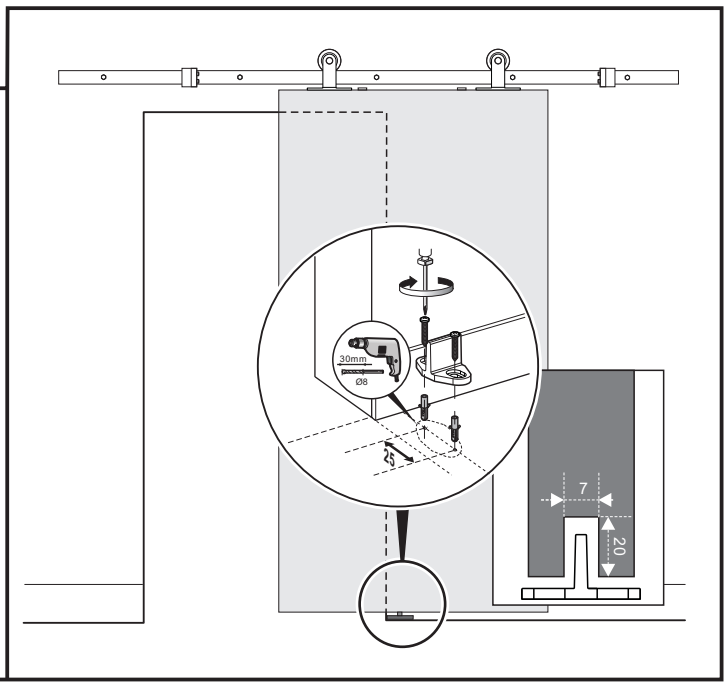
6
30mm
Ø8
7
20

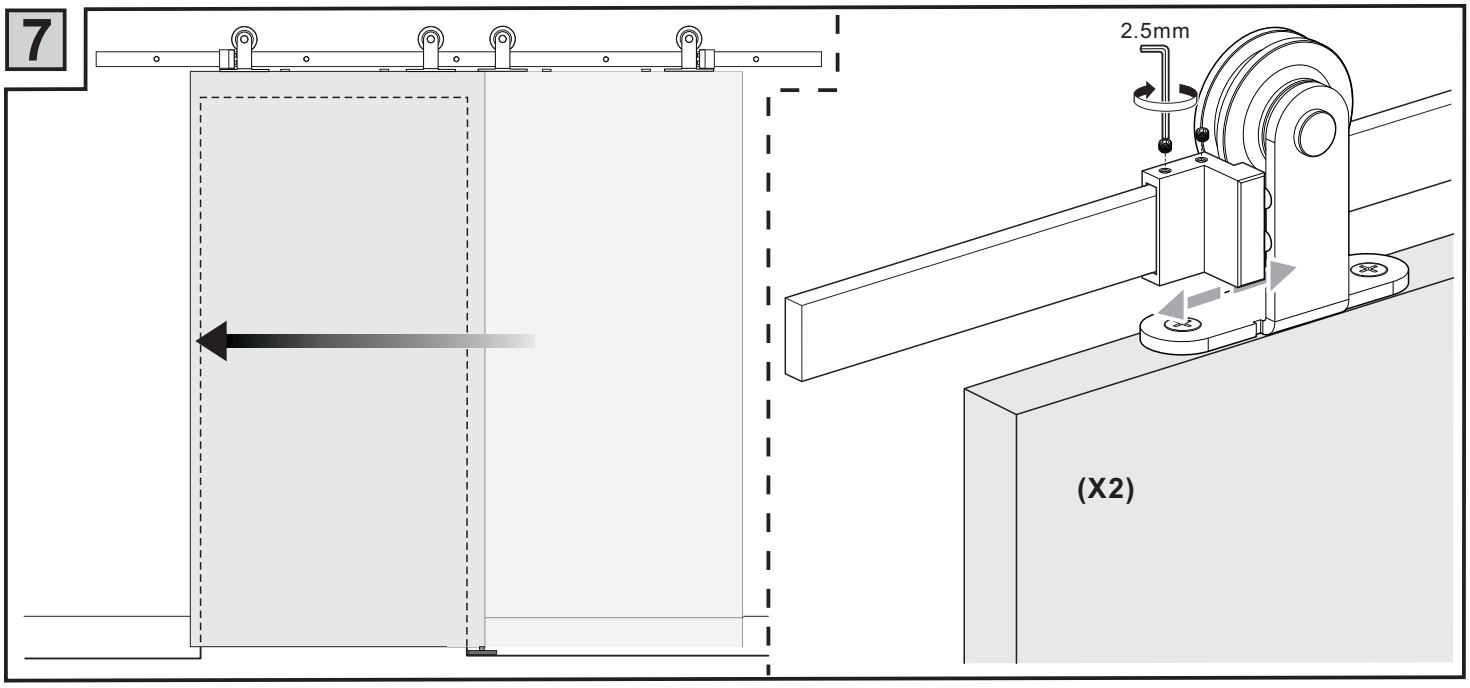
7
2.5mm
(X2)