Installation manual

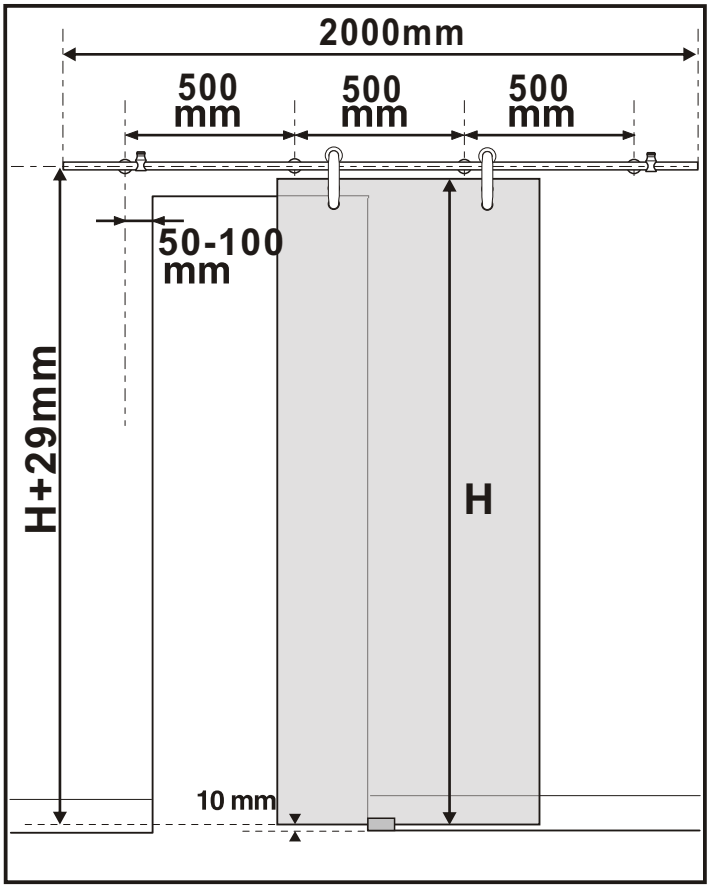

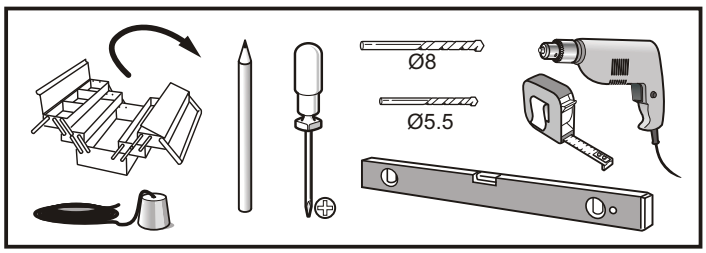

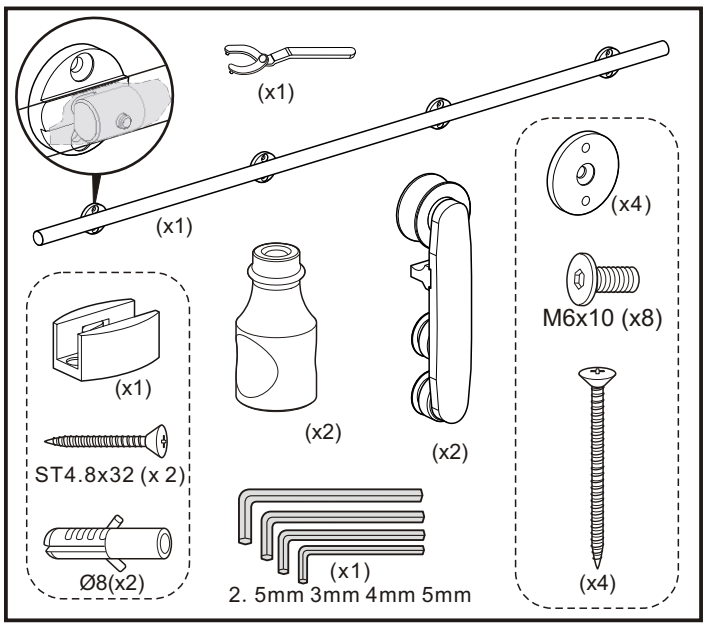

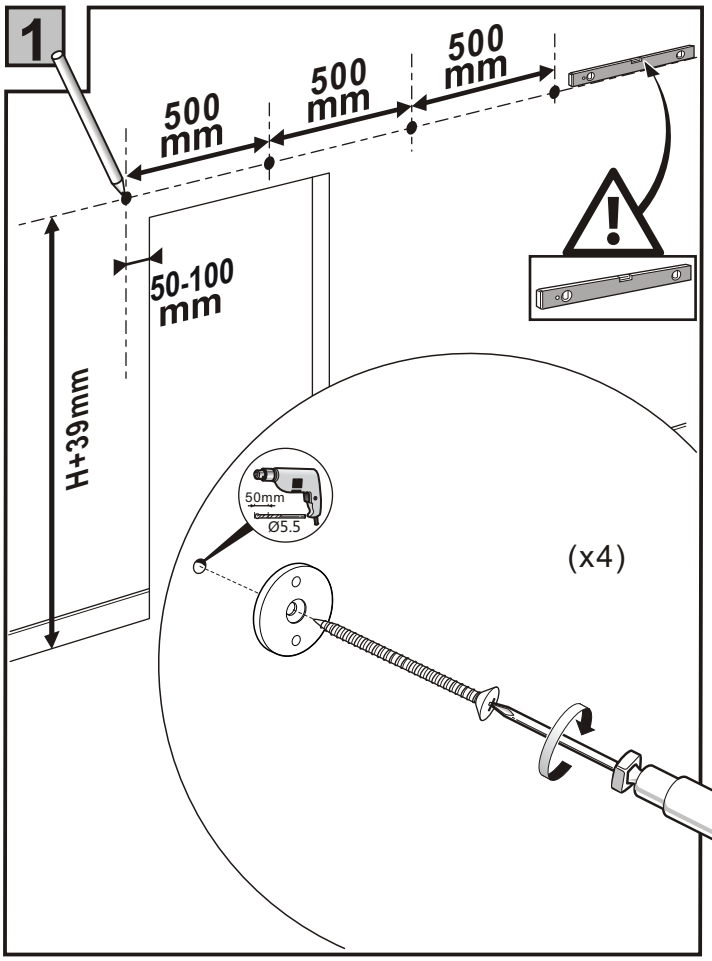

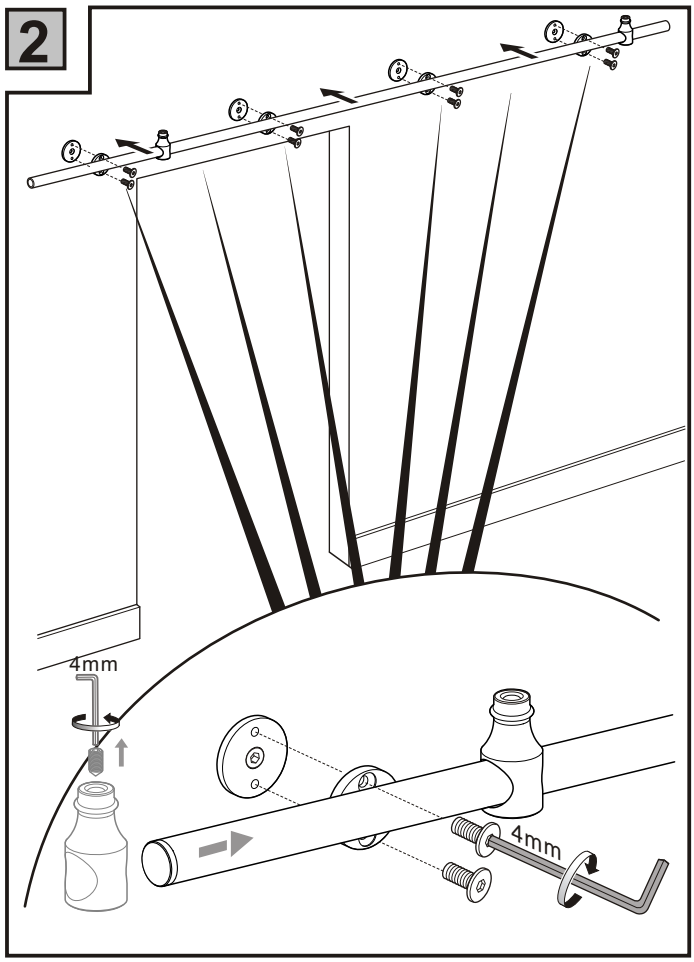

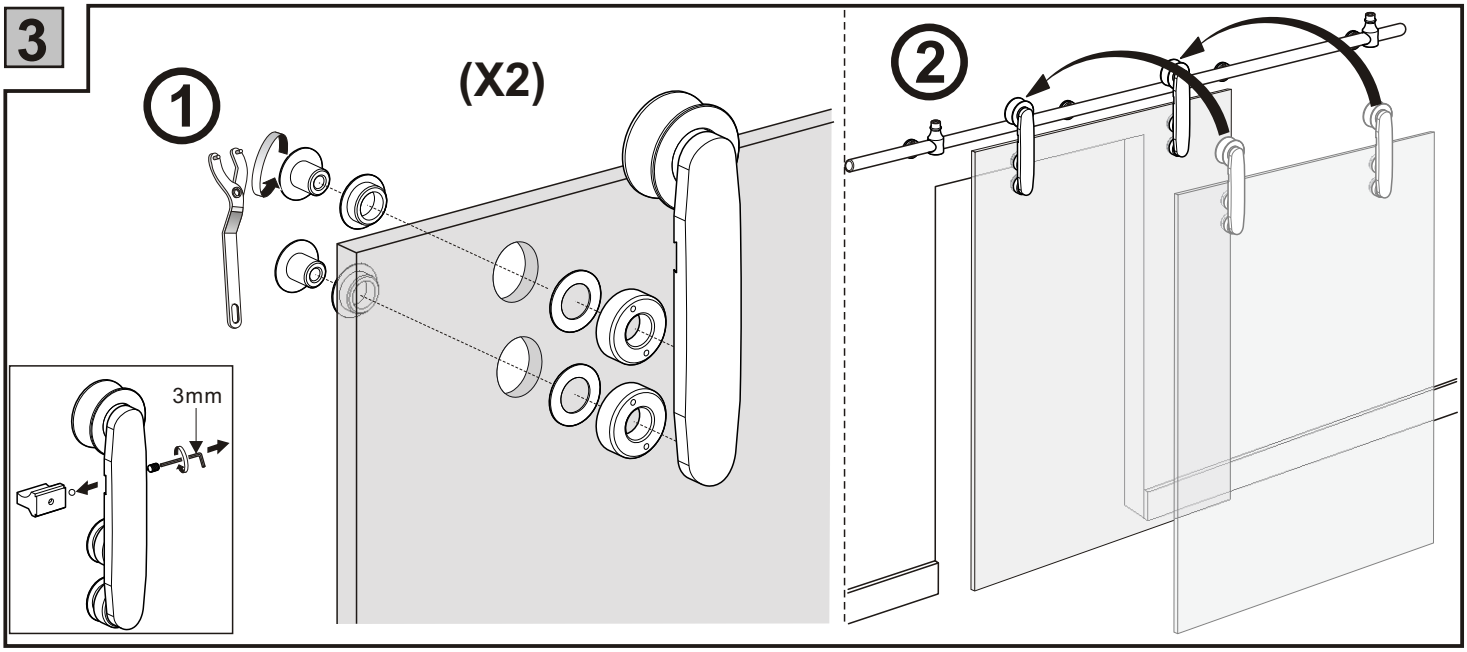
3
1
(X2)
3mm
2

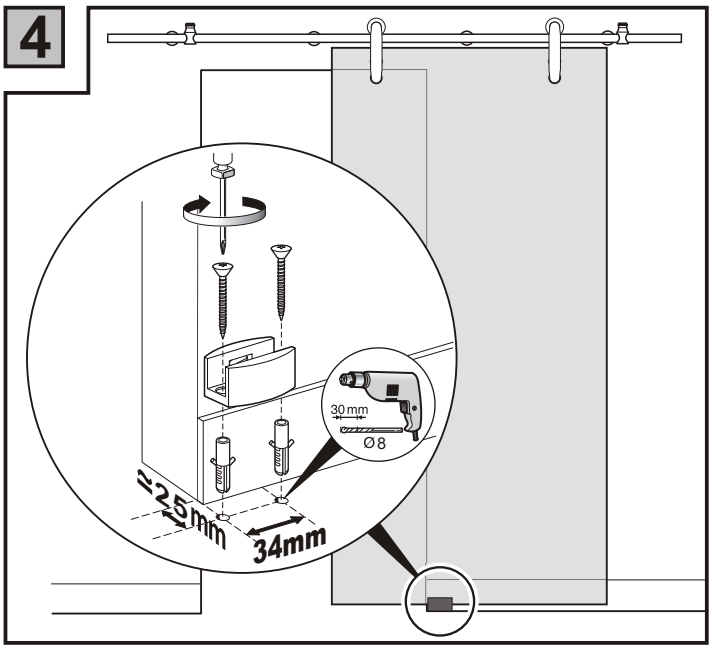
4
30mm
Ø8
2.5mm
34mm

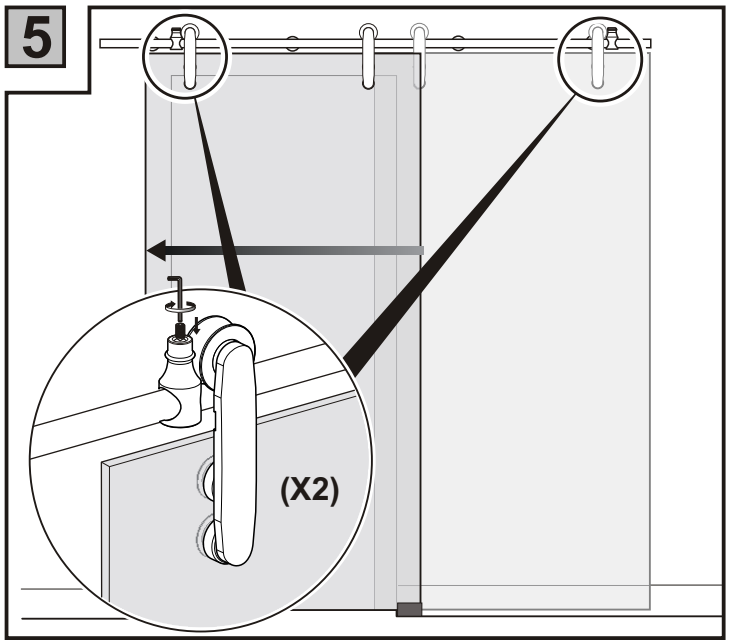
5
(X2)

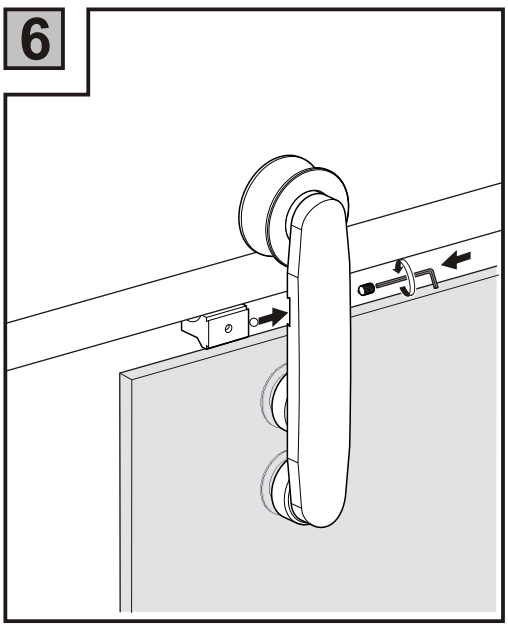
6

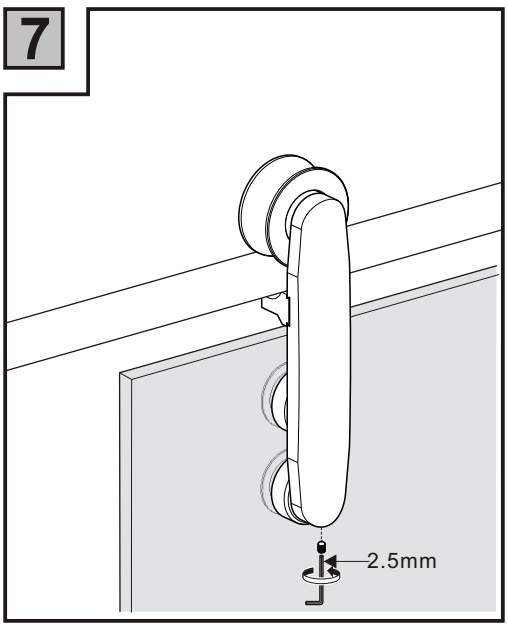
7
2.5mm